European profile cylinders Series 1100 RS4
Model 45-45
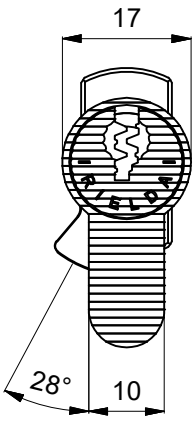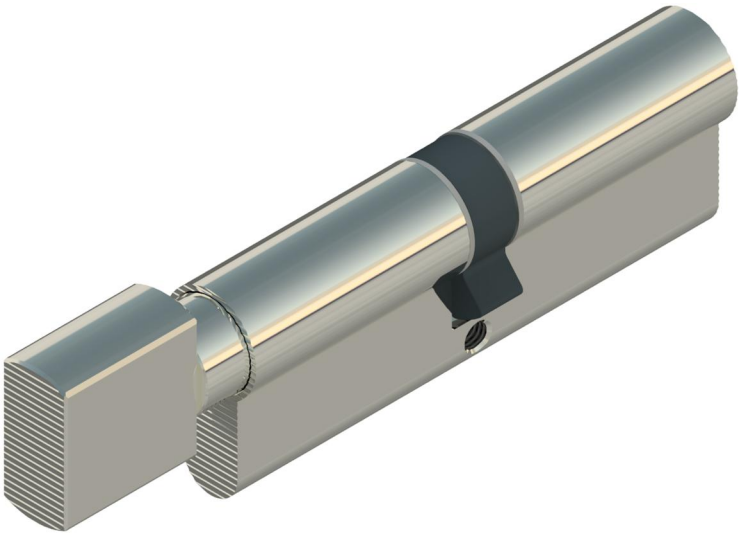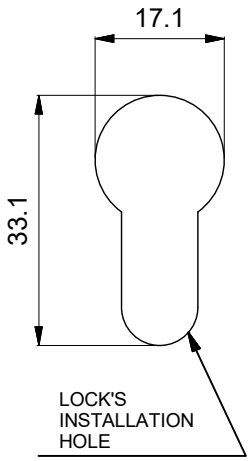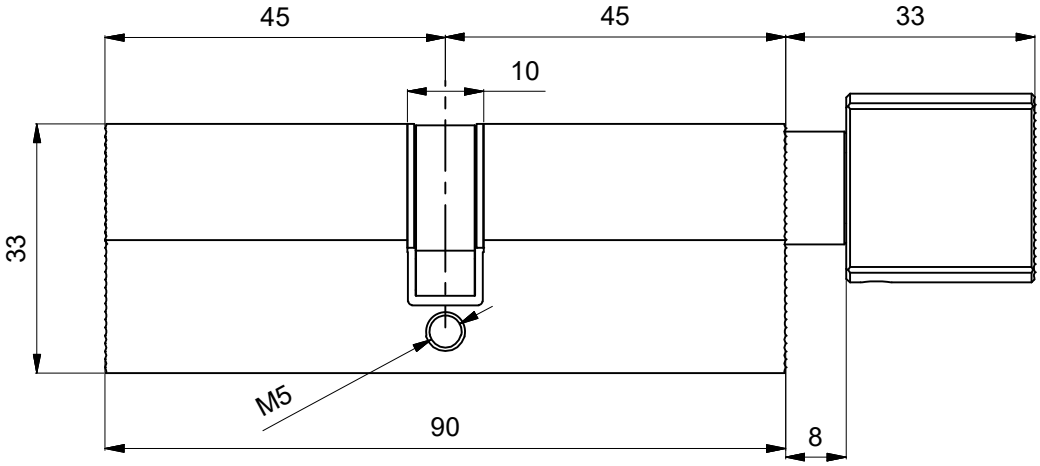
Characteristics:
-locking knob
-made in brass
-external finish on request (nickel/brass)
-cam tilt at 28° for tear proof function
-resistant to opening with method "bumping"
-resistant to opening with picks - "picking"
-resistant to drilling