Cylinder locks Series 5000 RS3
Model 5000 RS3
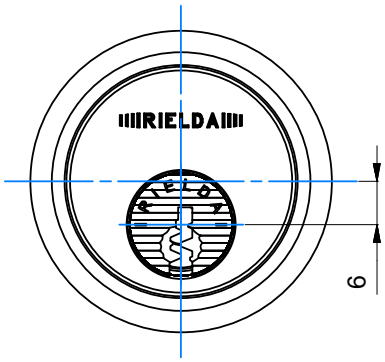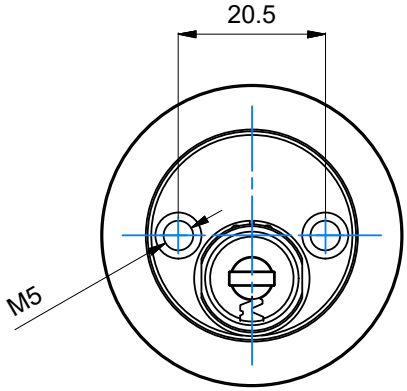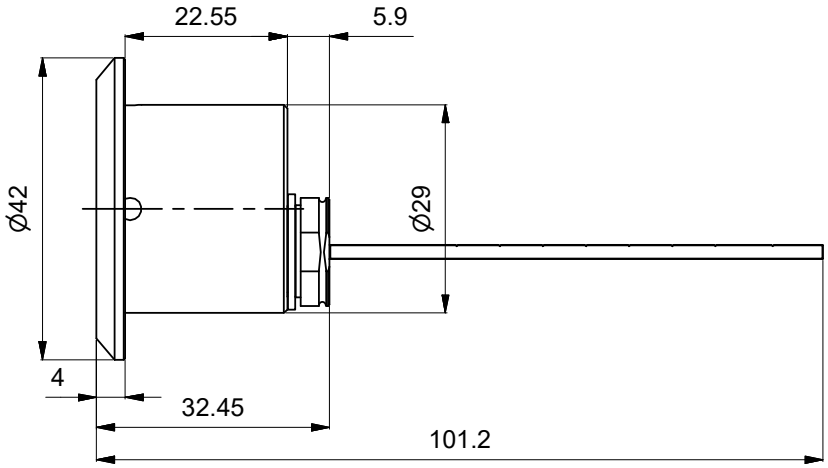
Charatteristics:
-mechanical re-programmable security cylinder
-made in brass external finish in nickel
-resistant to opening with method "bumping"
-resistant to opening with picks - "picking"
-resistant to drilling