Series 2000

Model 2019 L RS3

Description

Mechanically Re-Programmable lock for professional applications

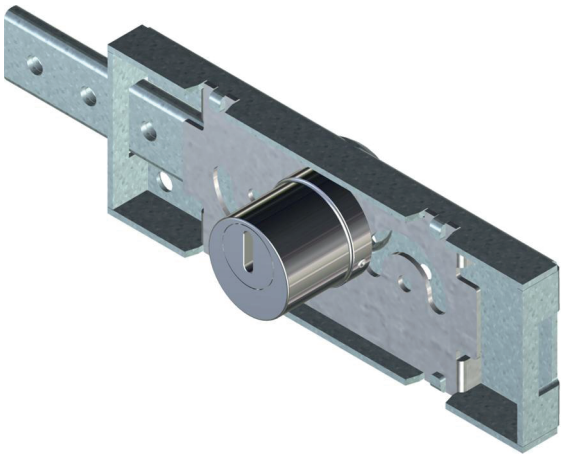

Technical specifications

- System: mechanically Re-Programmable with 62 500 different keys
- Body material: steel and brass

Resistant to:
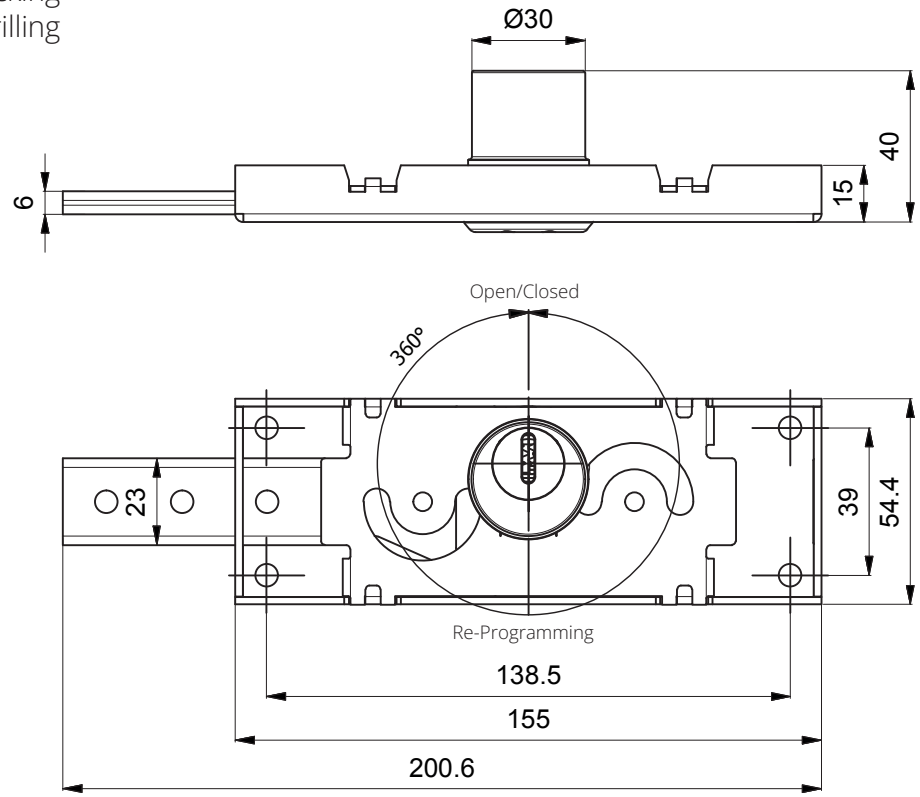
- Bumping
- Picking
- Drilling