Series 900

Model 900-60-35 RS2

Description

Mechanically Re-Programmable padlock with 132° rotation for professional applications

Technical specifications

- System: mechanically Re-Programmable with 7 million different keys
- Body material: brass
- Shackle material: hardened steel
- Rotation: 132° clockwise

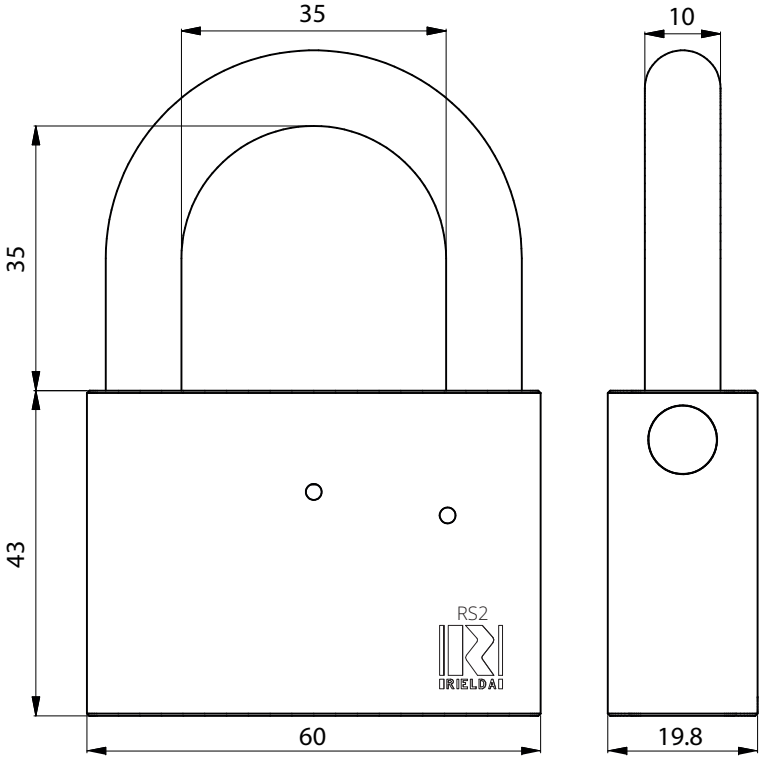

Resistant to:
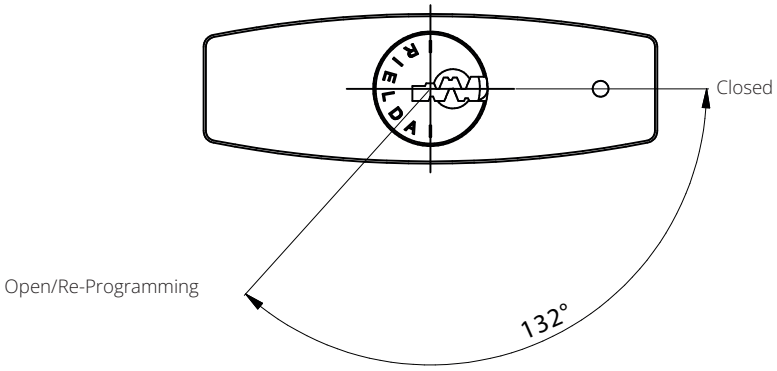
- Bumping
- Picking
- Drilling